126B
Legacy™ Line Air Conditioner
with Puron® Refrigerant
1 1/2 - 5 Tons

bryant®

Wiring Diagrams

CONNECTION DIAGRAM

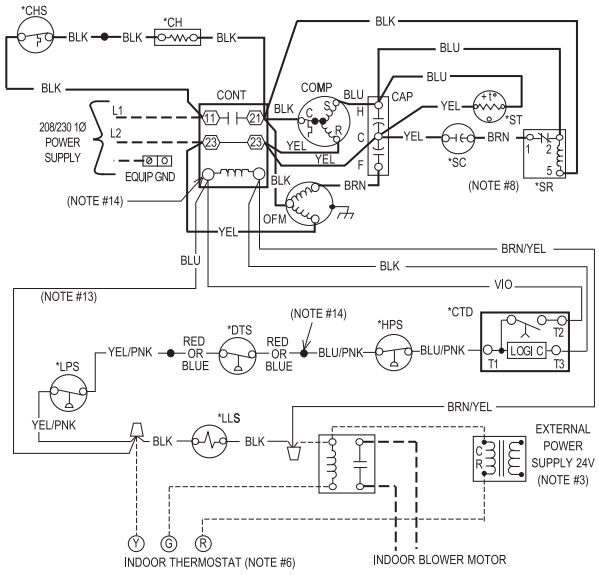

SCHEMATIC DIAGRAM (LADDER FORM)

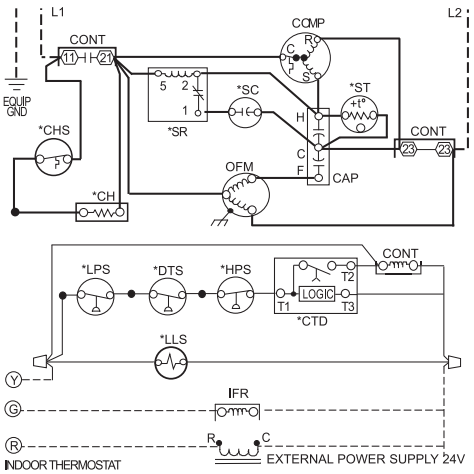

LEGEND

———	FACTORY POWER WIRING	COMP	COMPRESSOR
———	FACTORY CONTROL WIRING	*CTD	COMPRESSOR TIME DELAY
- - - - -	FIELD CONTROL WIRING	*DTS	DISCHARGE TEMPERATURE SWITCH
- · - · -	FIELD POWER WIRING	*HPS	HIGH PRESSURE SWITCH
○	COMPONENT CONNECTION	IFR	INDOOR FAN RELAY
	FIELD SPLICE	*LLS	LIQUID LINE SOLENOID VALVE
—●—	JUNCTION	*LPS	LOW PRESSURE SWITCH
CONT	CONTACTOR	OFM	OUTDOOR FAN MOTOR
CAP	CAPACITOR (DUAL RUN)	*SC	START CAPACITOR
*CH	CRANKCASE HEATER	*SR	START RELAY
*CHS	CRANKCASE HEATER SWITCH	*ST	START THERMISTOR

*** MAY BE FACTORY OR FIELD INSTALLED**

NOTES:

1. Symbols are electrical representation only.
2. Compressor and fan motor furnished with inherent thermal protection.
3. To be wired in accordance with National Electric N.E.C. and local codes.
4. N.E.C. class 2, 24 V circuit, min. 40 VA required, 60 VA on units installed with LLS.
5. Use copper conductors only. Use conductors suitable for at least 75°C (167°F).
6. Connection for typical cooling only thermostat. For other arrangements see installation Instructions.
7. If indoor section has a transformer with a grounded secondary, connect the grounded side to the BRN/YEL lead.
8. When start relay and start capacitor are installed, start thermistor is not used.
9. If any of the original wire, as supplied must be replaced, use the same or equivalent wire.
10. Check all electrical connections inside control box for tightness.
11. Do not attempt to operate unit until service valves have been opened.
12. Do not rapid cycle compressor. Compressor must be off 3 minutes to allow pressures to equalize between high and low side before starting.
13. Wire not present if LPS, DTS, HPS and/or CTD are used.
14. BLU or RED wire connected to contactor coil when DTS used and LPS, HTS, CTD not used.

CONDENSING UNIT CHARGING INSTRUCTIONS
For use with units using R-410A refrigerant

REQUIRED LIQUID LINE TEMPERATURE

Liquid Pressure at Service Valve (psig)	Required Subcooling Temperature (°F) 6	8	10	12	14	16
251	78	76	74	72	70	68
259	80	78	76	74	72	70
266	82	80	78	76	74	72
274	84	82	80	78	76	74
283	86	84	82	80	78	76
291	88	86	84	82	80	78
299	90	88	86	84	82	80
308	92	90	88	86	84	82
317	94	92	90	88	86	84
326	96	94	92	90	88	86
335	98	96	94	92	90	88
345	100	98	96	94	92	90
354	102	100	98	96	94	92
364	104	102	100	98	96	94
374	106	104	102	100	98	96
384	108	106	104	102	100	98
395	110	108	106	104	102	100
406	112	110	108	106	104	102
416	114	112	110	108	106	104
427	116	114	112	110	108	106
439	118	116	114	112	110	108
450	120	118	116	114	112	110
462	122	120	118	116	114	112
474	124	122	120	118	116	114

COOLING ONLY CHARGING PROCEDURE

1. Only use sub cooling charging method when OD ambient is greater than 70°F and less than 100°F, indoor temp is greater than 70°F and less than 80°F, and line set is less than 80 ft.
2. Operate unit a minimum of 15 minutes before checking the charge.
3. Measure liquid service valve pressure by attaching an accurate gauge to the service port.
4. Measure the liquid line temperature by attaching an accurate thermistor type or electronic thermometer to the liquid line near the outdoor coil.
5. Refer to unit rating plate for required subcooling temperature.
6. Find the point where the required subcooling temperature intersects the measured liquid service valve pressure.
7. To obtain the required subcooling temperature at specific liquid line pressure, add refrigerant if liquid line temperature is higher than indicated. When adding refrigerant, charge in liquid form using a flow restricting device into suction service port. Recover refrigerant if temperature is lower. Allow a tolerance of +/- 3°F.

⚠ CAUTION

1. Compressor damage may occur if system is over charged.
2. This unit is factory charged with R-410A in accordance with the amount shown on the rating plate. The charge is adequate for most systems using matched coils and tubing not over 15 feet long. Check refrigerant charge for maximum efficiency. See Product Data Literature for required Indoor air Flow Rates and for use of line lengths over 15 feet.
3. Relieve pressure and recover all refrigerant before system repair or final disposal. Use all service ports and open all flow-control devices, including solenoid valves.
4. Never vent refrigerant to atmosphere. Use approved recovery equipment.

340085-101 REV. A

Fig. 1 – 126BNA018-48, 208/230-1

CONNECTION DIAGRAM

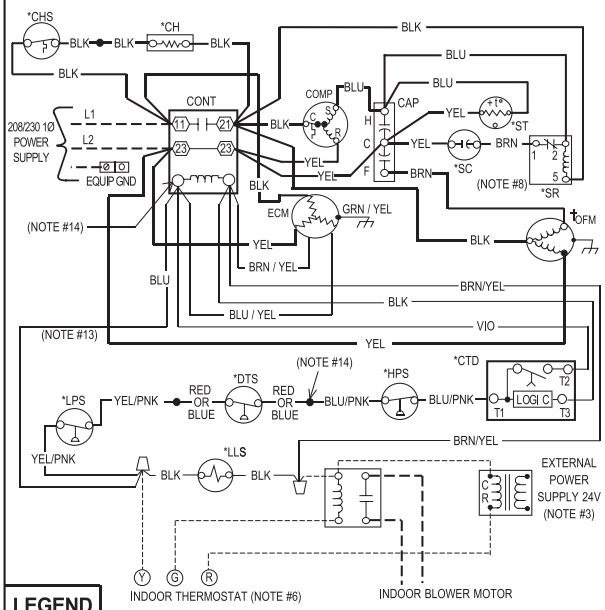

SCHEMATIC DIAGRAM (LADDER FORM)

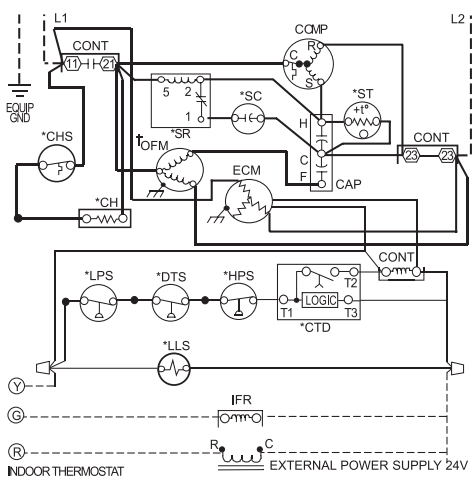

LEGEND

	FACTORY POWER WIRING	COMP	COMPRESSOR
	FACTORY CONTROL WIRING	*CTD	COMPRESSOR TIME DELAY
	FIELD CONTROL WIRING	*DTS	DISCHARGE TEMPERATURE SWITCH
	FIELD POWER WIRING	*HPS	HIGH PRESSURE SWITCH
	COMPONENT CONNECTION	IFR	INDOOR FAN RELAY
	FIELD SPLICE	*LLS	LIQUID LINE SOLENOID VALVE
	JUNCTION	*LPS	LOW PRESSURE SWITCH
CONT	CONTACTOR	†OFM	OUTDOOR FAN MOTOR (ACCESSORY PSC)
CAP	CAPACITOR (DUAL RUN)	*SC	START CAPACITOR
*CH	CRANKCASE HEATER	*SR	START RELAY
*CHS	CRANKCASE HEATER SWITCH	*ST	START THERMISTOR
		ECM	ELECTRONICALLY COMMUTATED MOTOR

*** MAY BE FACTORY OR FIELD INSTALLED**
† FIELD INSTALLED MOTOR FOR LOW AMBIENT KIT (REPLACES ECM)

NOTES:

1. Symbols are electrical representation only.
2. Compressor and fan motor furnished with inherent thermal protection.
3. To be wired in accordance with National Electric N.E.C. and local codes.
4. N.E.C. class 2, 24 V circuit, min. 40 VA required, 60 VA on units installed with LLS.
5. Use copper conductors only. Use conductors suitable for at least 75ºC (167ºF).
6. Connection for typical cooling only thermostat. For other arrangements see installation Instructions.
7. If indoor section has a transformer with a grounded secondary, connect the grounded side to the BRN/YEL lead.
8. When start relay and start capacitor are installed, start thermistor is not used.
9. If any of the original wire, as supplied must be replaced, use the same or equivalent wire.
10. Check all electrical connections inside control box for tightness.
11. Do not attempt to operate unit until service valves have been opened.
12. Do not rapid cycle compressor. Compressor must be off 3 minutes to allow pressures to equalize between high and low side before starting.
13. Wire not present if LPS, DTS, HPS and/or CTD are used.
14. BLU or RED wire connected to contactor coil when DTS used and LPS, HTS, CTD not used.

CONDENSING UNIT CHARGING INSTRUCTIONS
For use with units using R-410A refrigerant

REQUIRED LIQUID LINE TEMPERATURE

Liquid Pressure at Service Valve (psig)	Required Subcooling Temperature (ºF) 6	8	10	12	14	16
251	78	76	74	72	70	68
259	80	78	76	74	72	70
266	82	80	78	76	74	72
274	84	82	80	78	76	74
283	86	84	82	80	78	76
291	88	86	84	82	80	78
299	90	88	86	84	82	80
308	92	90	88	86	84	82
317	94	92	90	88	86	84
326	96	94	92	90	88	86
335	98	96	94	92	90	88
345	100	98	96	94	92	90
354	102	100	98	96	94	92
364	104	102	100	98	96	94
374	106	104	102	100	98	96
384	108	106	104	102	100	98
395	110	108	106	104	102	100
406	112	110	108	106	104	102
416	114	112	110	108	106	104
427	116	114	112	110	108	106
439	118	116	114	112	110	108
450	120	118	116	114	112	110
462	122	120	118	116	114	112
474	124	122	120	118	116	114

COOLING ONLY CHARGING PROCEDURE

1. Only use sub cooling charging method when OD ambient is greater than 70ºF and less than 100ºF, indoor temp is greater than 70ºF and less than 80ºF, and line set is less than 80 ft.
2. Operate unit a minimum of 15 minutes before checking the charge.
3. Measure liquid service valve pressure by attaching an accurate gauge to the service port.
4. Measure the liquid line temperature by attaching an accurate thermistor type or electronic thermometer to the liquid line near the outdoor coil.
5. Refer to unit rating plate for required subcooling temperature.
6. Find the point where the required subcooling temperature intersects the measured liquid service valve pressure.
7. To obtain the required subcooling temperature at specific liquid line pressure, add refrigerant if liquid line temperature is higher than indicated. When adding refrigerant, charge in liquid form using a flow restricting device into suction service port. Recover refrigerant if temperature is lower. Allow a tolerance of +/- 3ºF.

⚠ CAUTION

1. Compressor damage may occur if system is over charged.
2. This unit is factory charged with R-410A in accordance with the amount shown on the rating plate. The charge is adequate for most systems using matched coils and tubing not over 15 feet long. Check refrigerant charge for maximum efficiency. See Product Data Literature for required Indoor air Flow Rates and for use of line lengths over 15 feet.
3. Relieve pressure and recover all refrigerant before system repair or final disposal. Use all service ports and open all flow-control devices, including solenoid valves.
4. Never vent refrigerant to atmosphere. Use approved recovery equipment.

342878-101 REV. A

Fig. 1 – 126BNA060, 208/230-1